SALES DRAWING SALES DRAWING SALES DRAWING

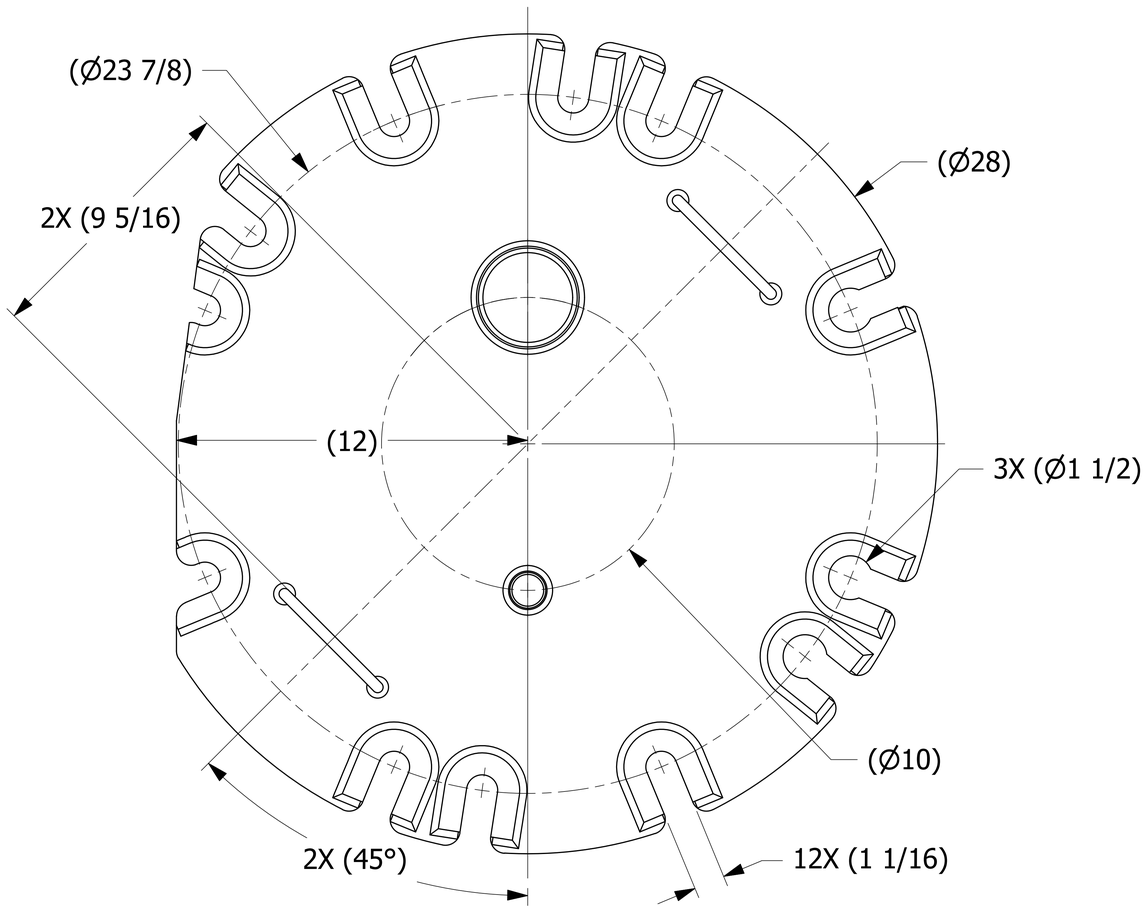

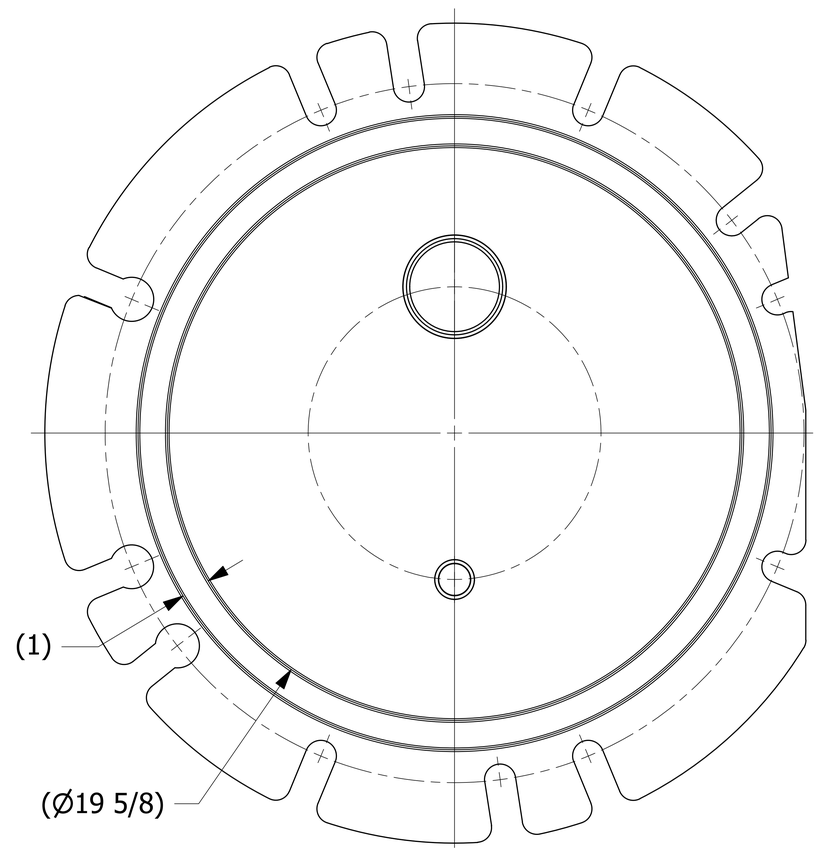

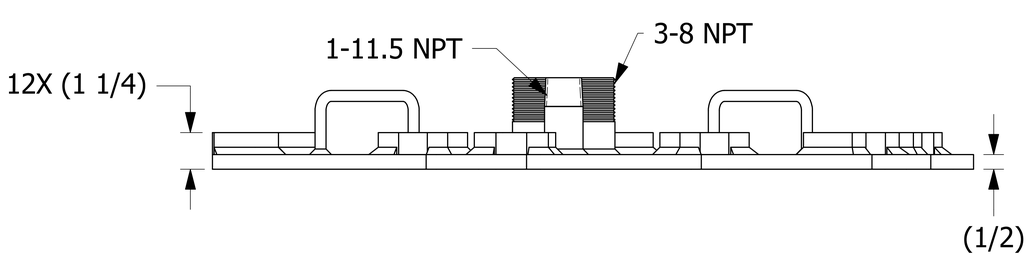

REV	BY	DATE	REF #	
C	CHL	7/12/21	202107121553	CHL
				PUB

UNLESS OTHERWISE SPECIFIED
DIMENSIONAL TOLERANCES
FRACTIONAL: ±1/16
X.XX: ±.03
X.XXX: ±.015
ANGULAR: ±1°
DEBURR ALL SHARP EDGES.
ALL MACHINED SURFACES TO HAVE A 125 RMS FINISH UNLESS NOTED OTHERWISE.
THIRD ANGLE PROJECTION

DRAWN BY:	WEB
CHECKED BY:	CHL
PROTOTYPE DATE:	5/20/2013
APPROVED FOR PRODUCTION BY:	WRB
PRODUCTION DATE:	5/28/2013
SIZE:	E
DRAWING #:	36348

SALCO PRODUCTS, INC.

PART NAME: MANWAY LOADING PLATE 20" 6 & 8-BOLT

MATERIAL: ALUMINUM

PROJECT #: 130517FR1 | SHEET #: 1 OF 1 | SCALE: 1:2

PART #: LC202TMC08

THIS PRINT, PROPERTY OF SALCO PRODUCTS INC, CONTAINS PROPRIETARY INFORMATION AND MUST NOT BE COPIED, REPRODUCED, OR USED DETRIMENTALLY TO OUR INTEREST.

SALES DRAWING SALES DRAWING SALES DRAWING